NUMBER FIFTEEN NOTES FROM THE SHOP TWO DOLLARS

Woodsmith™

Woodsmith

Number Fifteen **May, 1981**

Editor
Donald B. Peschke

Art Director
Ted Kralicek

Subscription Manager
Linda Hill

Administrative Assistant
Connie L. Lowe

Contributing Editor
Adolph E. Peschke

ISSN: 0164-4114

WOODSMITH is published bimonthly (January, March, May, July, September, November) by Woodsmith Publishing Company, 1912 Grand Ave., Des Moines, Iowa 50309.

WOODSMITH is a trademark of the Woodsmith Publishing Company.
©**Copyright 1981** by Woodsmith Publishing Company. All Rights Reserved.

Subscriptions: One year (6 issues) $10, Two years (12 issues) $18. Single copy price, $2. (Canada and Foreign: add $2 per year.)
Change Of Address: Please be sure to include both your old and new address for change of address. Mail to: Woodsmith, 1912 Grand Ave., Des Moines, Iowa 50309.
Second class postage paid at Des Moines, Iowa.
Postmaster: Send change of address notice, Form 3579, to Woodsmith Publishing Co., 1912 Grand Ave., Des Moines, Iowa 50309.

BACK ISSUES

A list of contents of all back issues appears on page 16. If you would like to order back issues, use the reply envelope bound in the center of this issue. If that envelope is missing, just send us a note saying what issues you want and enclose payment with your order. Back issues are $2 each. (Iowa residents add 3% sales tax.)

SAMPLE COPIES

Do you have friends who are interested in woodworking? Maybe they would like to see a sample copy of **Woodsmith.** Just send (you can or they can) the name and address of your friend to: **Woodsmith,** Sample Copy, 1912 Grand Ave., Des Moines, Iowa 50309.

We'll send a sample copy along with a subscription form. There's no obligation to buy.

DAMAGED COPIES

If your copy of **Woodsmith** is damaged in the mail, you can get a replacement copy. Just write to us, explain the problem, and we'll send out a new copy at no charge.

Talking Shop

ABOUT THIS ISSUE

The two major projects in this issue — the oak table and chair — have opposite problems. The table is quite easy to build, but requires a lot of wood. The chair on the other hand doesn't require much wood, but does involve some rather precise joinery.

These are the two 'not enough' problems we all face in woodworking: not enough money to buy the wood, and not enough time to do the joinery. But in the case of these two projects, neither of these problems is as big as it seems.

The total cost for the oak we used to build the table was $70. This figure is based on a cost of $2.40 per board foot for FAS red oak — the price we paid at a local hardwood lumber yard.

Just for comparison, clear Ponderosa Pine costs about $2.80 per board foot, bringing the total cost of the table to about $80. (Of course, these prices will vary across the country, but some hardwoods are actually cheaper than clear pine.)

Now we get to the matter of joinery. We chose mortise and tenon joinery for both of these projects. The beauty of this joint is obvious on the chair, and this is one of the reasons we chose it.

Apart from beauty, it does take quite a bit of time to cut all of these M & T joints (especially on the chair). And, it's quite a challenge to get them to fit properly. But that, to me, is the best part of woodworking — taking the time to meet a challenge. And in this case, it's really worth it.

SLOT VS. SQUARE MORTISE

Those of you who have been reading *Woodsmith* for awhile, have probably noticed that we've given quite a bit of coverage to the mortise and tenon. This all started in *Woodsmith* Number Eight when we presented a fairly wide overview of the mortise and tenon joint and how it's cut.

Since then we've tried to show a number of variations of the mortise and tenon and their applications. In almost every instance, we've shown this joint with a slot mortise. (A slot mortise has rounded ends, and the tenon is rounded to fit the mortise.)

In most cases I think this approach is easier than making a square-cornered mortise. However, there are exceptions. In this issue we've given the step by step for cutting a square-cornered mortise by hand. (Although we do cheat a little bit by showing the use of a drill press to get rid of most of the waste before the cheeks of the mortise are pared square with a chisel.)

There are really two reasons we've switched to the square-cornered mortise this time. The most obvious reason is that the through mortise on the chair would simply not look right if the ends were rounded as with a slot mortise.

But the other reason is that we were working with oak. And this is a case of allowing the wood to tell you what type of joint is best. When working with oak, I find it's a real hassle trying to round over the tenons to fit a slot mortise. Oak tends to splinter and chip off too easily. So, in this case it's really much easier to chop the mortise square and leave the corners of the tenon square.

CUTTING DIAGRAMS

Much of woodworking involves making the most of what you've got. This was the guiding principle for building the storage box shown on page 14 of this issue.

Right from the beginning I knew that the cutting diagram for this project was going to be the toughest part to work out. In fact, I spent hours trying to get all of the pieces dimensioned and laid out so there would be a minimum of waste. The result is a cutting diagram that is my pride and joy.

I think working out a cutting diagram for each project is important. Whenever I start to build something, one of the first considerations is the cutting diagram. Very often I find that a few little changes in the design make big changes in the amount of material needed, and especially in the amount of waste.

We try to show cutting diagrams for almost every project. However, I must admit that they are really just guidelines for the amount of material you'll probably need. We show the boards that are needed based on the sizes of dimension (softwood) lumber.

This might be a little misleading when hardwood is used for the project. Most hardwood is sold 'random width and length.' (The exception is hardwood sold through mail-order catalogs, which is almost always cut to specified widths and lengths.) Although you may not be able to buy boards at the exact dimenions shown, the cutting diagram should still be helpful — and at the least, a good starting point.

DAMAGED COPIES

Almost every week we get letters from readers saying that their issue of *Woodsmith* was damaged in the mail. If you receive a copy that was damaged (or if something is wrong with the printing), just let us know and we'll send out a new copy enclosed in an envelope to protect it. No charge.

NEXT MAILING: July 6, 1981.

Tips & Techniques

ENGINE VALVE SANDING PAD

Re: your tip on making a small sanding disk for sanding the bottom of routed trays (*Woodsmith* No. 13).

I use old engine valves (from cars, lawn mowers, etc.) as a sanding pad. After extracting the valve from an old engine, I grind it to the diameter I need. Then I cut a small circle of sandpaper and glue it to the bottom of the valve. (I prefer emery cloth because it lasts much longer.)

All you have to do is chuck the valve in a portable electric drill or a drill press and you can sand any small flat area.

D. Fox
Riverside, Penn.

VERY SMALL SANDING DRUM

Re: your tip on small sanding drums.

I use cotter pins as small sanding drums. I simply flatten the looped end and slip a strip of sandpaper (or emery cloth) into the pin. As the cotter pin is tightened in the drill chuck, the sides of the pin, in turn, tighten against the sandpaper, holding it securely in place.

D. Fox
Riverside, Penn.

DENTAL SANDING DISKS

Re: your tip on small sanding disks.

A visit to your local dental supply house should reveal a variety of small sandpaper disks used by the dental profession. These sandpaper disks are already cut round, come in a variety of small sizes, and are available in several grits of garnet paper, sandpaper, etc.

Also, the disks come with a hole punched in the center for the pin of a mandrel. (Dentists usually use a Morgan-Maxfield mandrel with a 3/32" shaft. This works best in a hand grinder.)

Dr. Royal B. Dunnkelberg
Prescott, Arizona

STOP FLYING WEDGES

For a recent mass production job I had to make numerous wedge-shaped cut-offs. After almost every pass on the table saw, these small cut-offs would ride along the blade and then drop down into the opening in the table insert (the metal plate around the blade). The wedges were caught by the spinning blade and hurled out at terrific speeds.

After ducking several flying wedges, I decided that it was too dangerous to continue unless the problem was eliminated. I placed a strip of plastic electricians tape over the slot, leaving a very small opening — just enough to clear the blade. It works beautifully . . . no more flying wedges.

Alex W. Flinsch
Garfield, New Jersey

YOU DON'T NEED FOUR HANDS

To prevent pipe clamps from marring the edges of boards or a project, we all use blocks of wood between the clamp jaws and the workpiece. However, when I'm working by myself I need four hands to hold the project, put the blocks in place, and tighten the clamps.

To solve this problem, I drilled two holes in each jaw of my pipe clamps. Then I cut several blocks of scrap wood and screwed a block to each jaw. This keeps my hands free to do the necessary adjusting . . . without having to worry about the blocks falling off.

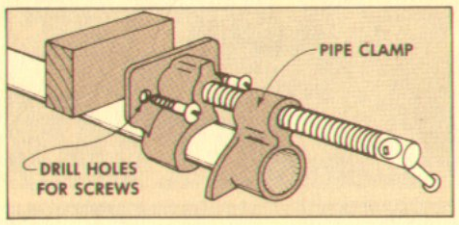

I have several sets of blocks: mitered, angled, curved and straight — depending on the nature of the clamping at hand.

John W. Manka
Tuscon, Arizona

THREE QUICK TIPS

To remove dents from wood surfaces, I use a damp cloth and clothes iron or soldering iron. Place the damp cloth over the dent and apply the hot iron. Steam from the cloth will cause the fibers of the wood to swell, bringing them back to level with the original surface.

James J. Heffner
Lock Haven, Penn.

Many people don't realize that a nail has a cutting edge and a splitting edge. If you place the cutting edge *across* the grain, it will help prevent splitting the wood.

Yorkie A. Walters
Buffalo, Wyoming

When I have to fill nail holes, I gather some very fine wood dust left over from sanding. This dust is mixed with a drop or two of white glue until I get a very thick paste. The paste is forced into the nail holes, slightly overfull, so it dries almost level with the surface. After a good final sanding the nail holes completely disappear.

Gary Kobus
Cedar Grove, Wisconsin

NAILING FIXTURE

The worst part about building the storage box shown in this issue (page 14) is nailing together all of those little drawers. After I cut all the pieces for the drawers, I was fumbling around trying to see if they were going to fit.

Ted got a kick out of watching me trying to nail the first drawer together, and then said, "What you need is a nailing fixture." He found a piece of 2x4 scrap and made the fixture shown below.

This fixture is sized to accept the small drawers, holding all the pieces while they're being tacked together. For the larger drawers, simply rip this fixture down the center and add a filler block to widen it.

Don and Ted

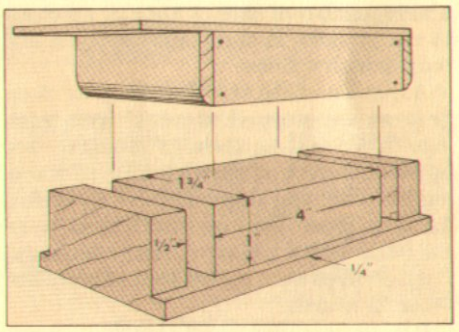

SEND IN YOUR IDEAS

We invite you to share your woodworking tips and techniques with other readers of *Woodsmith*. We will pay a minimum of $5 for a tip, and $10 or more for a special technique. All material submitted becomes the property of Woodsmith Publishing Co. Upon payment, you give *Woodsmith* the right to use the material in any manner for as long as we wish.

If your idea involves a drawing or photo to explain it, do your best and, if necessary, we'll make a new drawing, or build the project or jig and photograph it. (Any drawings or photos submitted cannot be returned.)

Send your ideas to: *Woodsmith*, Tips & Techniques, 1912 Grand Ave., Des Moines, Iowa 50309.

Contemporary Oak Table

A SOLID OAK TABLE THAT'S BUILT TO LAST

Fifty years from now if someone finds this table collecting dust in an attic, or sitting at the back of a garage piled with old newspapers and magazines, he'll probably remark, "Boy, they sure don't build tables like this anymore."

This is our contribution to the class of furniture that's built to last. It's solid oak, heavy and sturdy. But I think it has a certain warmth about it too. It's the kind of table you might expect to find in a country kitchen.

The table's top is thick and solid. We chose 5/4 red oak (5/4, pronounced five-quarter, is 1 1/16" thick actual). And though that much wood sounds expensive, red oak costs less than clear pine (at least around here).

THE TABLE'S TOP

We started construction with the table's top. It consists of fourteen pieces of oak glued up in butcher block fashion to form a 35" x 35" square. We cut these pieces 2½" wide and about 36" long to begin with. (After the boards are glued up the ends are trimmed to 35" with a Skil saw.)

Once the pieces for the top are cut, we layed them out and arranged them for grain pattern. Since we were working with a large number of narrow boards, we chose to cut grooves in the edges and join the boards with splines.

As shown in Fig. 1, ¼" wide by 5/16" deep grooves are stopped about 1" from each end. When cutting these grooves, we set up the table saw as shown in Fig. 2, marking the start and stop points on a piece of masking tape. The two end boards were cut first, with a groove on one edge only. Then grooves were cut on both edges of the other 12 boards.

It's important when cutting these grooves to always keep the same side of the board toward the fence. (We always placed the face, or top side of each board against the fence.) Also, it's best to make a trial cut in a piece of scrap just to make sure the groove is the correct width for the ¼" plywood splines.

The end of each groove curves up because of the shape of the saw blade. Rather than cut the ends of all the splines to match this curve, we simply cut the splines a total of 4" short, allowing 2" at each end where the curve is.

Now the boards for the top are ready to be glued up. With this many boards, it's just about impossible to glue up all of them at once. We glued these boards together progressively, applying glue to the edges

FIGURE 1

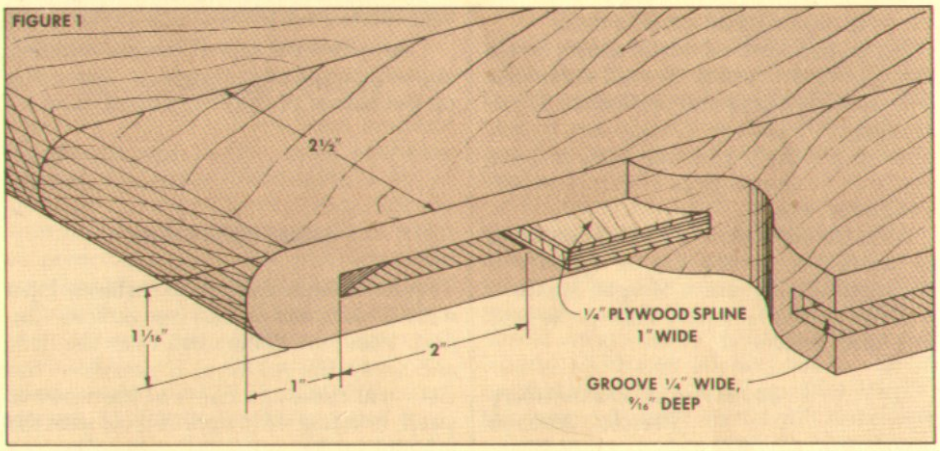

FIGURE 2

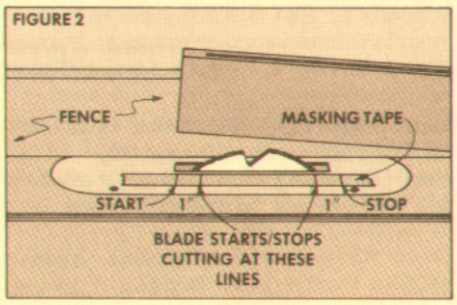

FIGURE 3

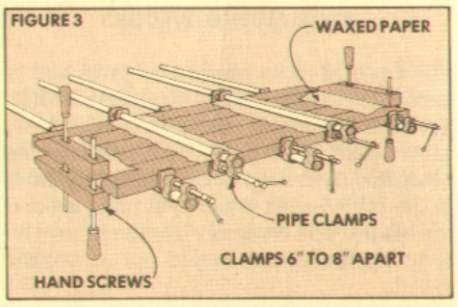

of two boards and clamping them together, then loosening the clamps, adding another board, etc. (For all of this gluing we used *Elmer*'s Carpenter's Glue, the yellow kind.)

The splines should force the tops of the boards flush. Then it's just a matter of making sure the top doesn't cup. To prevent any cupping we placed some waxed paper over the ends of the boards and used *Jorgensen* hand screws to keep the surface flat, Fig. 3.

THE LEGS

While the top was drying, we went ahead and worked on the legs. Each leg is glued up from three pieces of stock, (see Fig. 4) to form a 2⅞" square leg. There's no special approach to doing this, just apply the glue and clamp up the pieces with as many C-clamps as you can find.

After the glue is dry, scrape off any excess, and run the edges over a jointer or through the table saw to square them up. Then the mortises can be chopped out, Fig. 5. (The method we used for cutting the mortises is described on page 12.) Finally, the four corners of the legs and the bottom edges are rounded over with a router and a ⅜" quarter-round bit.

THE APRONS

Once the mortises are done, the tenons are cut at the end of the aprons. Make sure the distance between the two shoulders of the tenons is exactly the same on all four aprons, Fig. 6. The bottom edge of the apron is rounded with a ¼" quarter-round bit.

After the tenons are cut, grooves are cut in two of the aprons (see Fig. 7) to accept the button fasteners. This method of fastening is very handy for removing and reattaching the top. (This table is very heavy, if it needs to be moved it's much easier to remove the top.)

However, there is another reason for using these 'buttons.' A table top this wide is bound to swell and shrink with changes in humidity throughout the year. The buttons can slide in the groove as the top moves, thus preventing any pressure that might cause splitting.

FINISHING UP

The ends of the table top can now be cut off to the 35" length. Then the top and bottom edges are rounded over with a ½" quarter-round bit.

To finish this table we applied *Pratt & Lambert* Sanding Sealer H-40 to the legs and top. Then we added two coats of *P & L* varnish to the top only. (Varnish is not really necessary on the legs.)

The entire table was rubbed out with pumice stone and rubbing oil to a satin sheen. (This finishing procedure is discussed in detail in *Woodsmith* No. 14.)

FIGURE 4

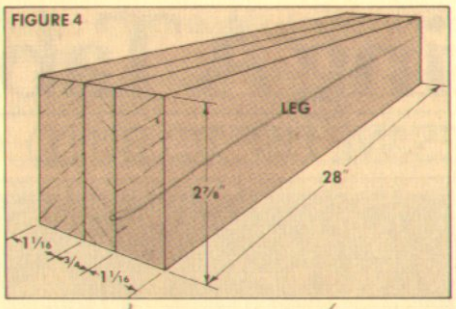

FIGURE 5

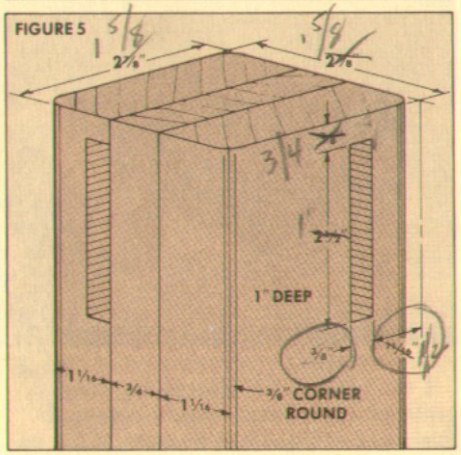

FIGURE 6

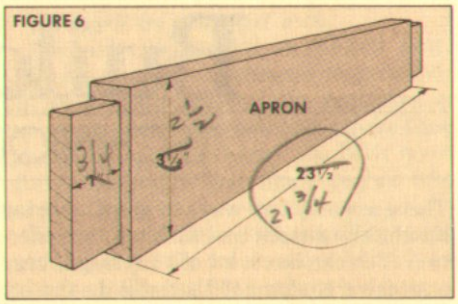

FIGURE 7

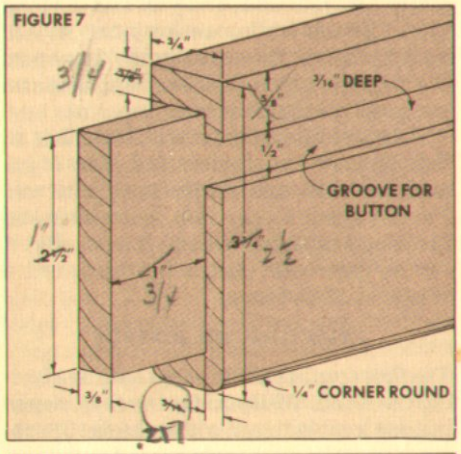

FIGURE 8

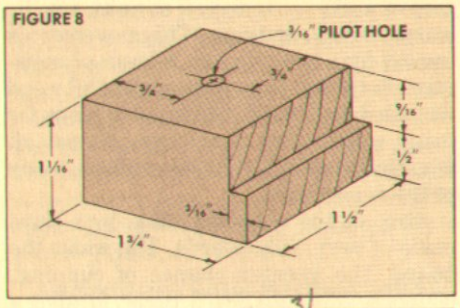

FIGURE 9

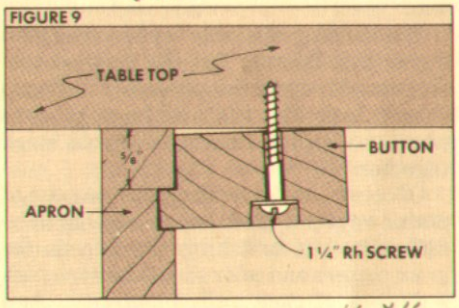

FIGURE 10

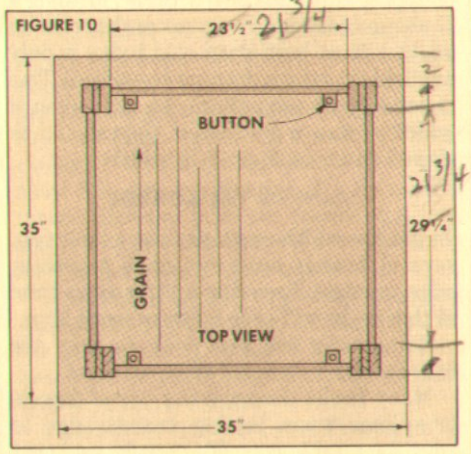

FIGURE 11

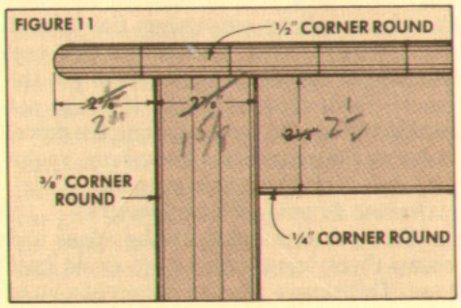

MATERIALS LIST

A	Top, finished	1 1/16 x 35 - 35
	Top, each piece	1 1/16 x 2½ - 36
B	Legs, finished	2⅞ x 2⅞ - 28
	Legs, two pcs.	1 1/16 x 2⅞ - 28
	Legs, one pc.	¾ x 2⅞ - 28
C	Apron, finished	¾ x 3½ - 25⅝

CUTTING DIAGRAM

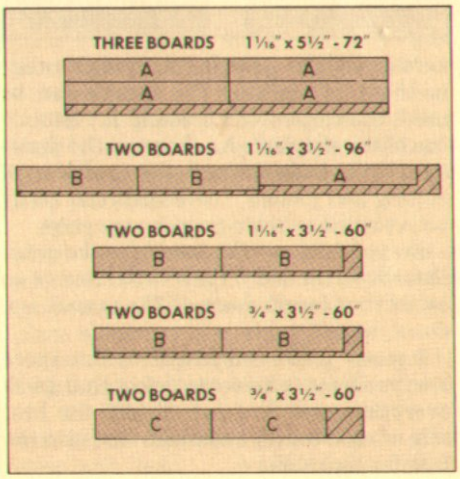

Building A Table Top

TECHNIQUES WE USE TO BUILD A TABLE TOP

There are only two ways to get a table top absolutely smooth and finished to perfection. You can buy a lot of very large, very expensive equipment that will do the job nicely. Or, you can spend years developing the skills and craftsmanship necessary to do it by hand. There really isn't any way the average guy in the average shop can get good results on a table top.

Baloney! All you have to do is replace all that expensive equipment and years of experience with one simple tool: patience. I'm not going to say that smoothing and finishing a table top is easy. It's not. But it can be done with just a few tools and a whole lot of patience.

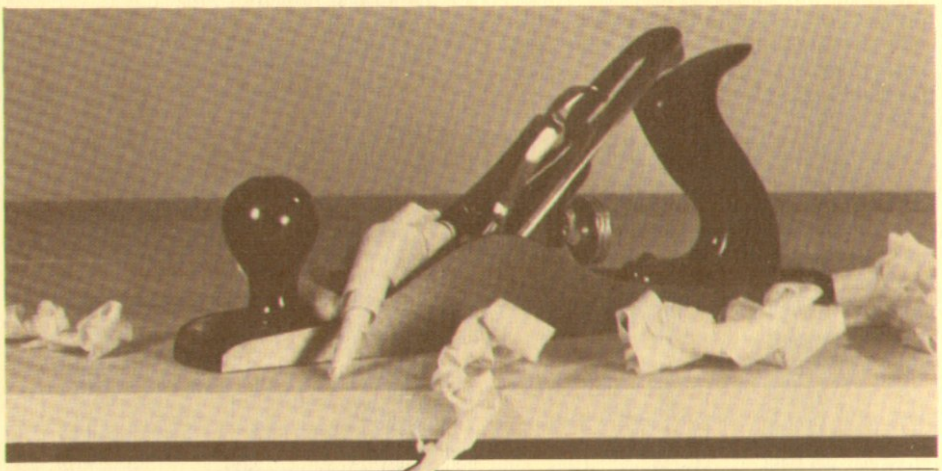

SELECTING THE BOARDS

The first step in building anything is selecting the wood. While this is the first step in making a table top, it's also the first problem.

The building of a table top involves joining several boards. But the finished product should negate this process . . . the top should look like it's one homogeneous piece, not just a bunch of boards stuck together.

Of course, we're dealing with wood, not plastic or paint. Each board is going to be different, but matching the boards for grain pattern and color should be done with a degree of care and sensitivity. And though all the boards can't be identical twins, they should at least be kissing cousins.

Once the boards are selected, lay them out in the order they will be joined. Then, just to keep things straight, I draw a large triangle (called a carpenter's triangle)

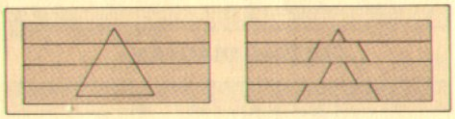

across all the boards. Although other methods of marking the boards can be used, the carpenter's triangle is certainly one of the simplest. As shown in the drawing above, even through the confusion of cutting and joining, the boards can easily be returned to their proper sequence.

Do you arrange the boards so the grain (as seen on the end of the boards) curves up on the first board, down on the second, up, down, etc.?

I guess you're supposed to. But there always seems to be some defect that goofs everything up. So I just choose the best side of each board, and make that side the face (or top) side.

I can't deny that alternating the grain of each board makes sense. Problems do arise just because of the nature of wood . . . it moves: shrinks, swells, warps, twists, and cups. This movement is caused by absorption or release of moisture. In the old days when almost all wood was air dried, wood continued to move for many years. But nowadays, almost all wood is kiln dried. And this reduces many of these problems.

Also, in the old days table tops were made of very wide boards. The wider the board, the greater chance of cupping. (Cupping is when a board 'curls', forming a U-shaped concave or convex arch across its width.) Most hardwood sold today is only available in relatively narrow widths. This is actually an advantage. In fact, even if wide boards are purchased, they should be ripped down to 4" or 5" in width.

JOINING THE BOARDS

To get the width necessary for a table top, several boards must be glued together, edge to edge. Spending a little extra time at this stage will save hours of work later.

So, what's the best way to join the boards? With dowels? With splines?

Many books describe the use of dowels or splines when joining boards edge to edge for a table top. It's usually said that dowels or splines strengthen the joint. I think that's a little misleading. The real purpose of dowels or splines is to get the boards flush across the top. If you're not extremely careful when aligning the dowel holes, or the grooves for the spliens, you're just defeating the whole purpose.

So how do you join the boards?

I just put some glue on the edges and clamp them together — a good old butt joint. This simple joint has received a lot of bad press. It's true that you can't join the *end* of one board (short grain) to the *edge* of another board (long grain) with glue only. But joining edge to edge (long grain to long grain) does produce a good glue joint, one that's quite strong.

However, whether you use dowels, splines or just a butt joint, there's no point in even applying the glue unless the edges of the boards are square with the top (face). Here we get into an area that's fraught with debate.

How do you square up the edges?

Here's what I do. I check my table saw to make sure the blade is perpendicular to the table. Then I rip a clean edge on the boards. If it's hardwood, I use a 40-tooth carbide tipped blade. If it's softwood, I use a hollow-ground planer blade. That's it. You can, if you have a jointer, clean the saw marks off the edges. If you don't have a jointer, you've just saved yourself the cost of another piece of equipment and one more step.

Now I'm ready to glue up the boards. Well, not quite yet. This is where patience is important. I place the boards on a flat surface (the top of the table saw) and push them together with hand pressure.

If the joint between the two boards is tight, I'm half-way there. Next, I flip the boards over and check the joint on the bottom side. If this joint is tight, I'm all the way there. If not, it probably means that the saw blade is not really set at 90°.

It's not necessary to reset the blade and rip new edges. Just take one board and place it on the saw with the face side down this time. Now rip a new edge. What this does, in effect, is produce a bevel-rip joint. One board is beveled to the right, the other is beveled the same amount to the left. Thus, the two edges will be flush.

GLUING AND CLAMPING

The boards have been chosen for grain and color, the edges are cut square, and I'm ready to glue them together. Again . . . patience. I get everything ready, just as if I were going to apply the glue and clamp them up. Then I set the glue aside. But I go ahead and clamp the boards together — a dry run to check things out.

When clamping, I use pipe clamps (bar clamps tend to bend too much). You need enough clamps so they're spaced no more than 6" to 8" apart. Also, they should be alternated, one on top, next on the bottom, etc. This tends to equalize the warping (cupping) caused by the clamps themselves.

Tighten the clamps until the gap between the boards disappears. Not too tight, not too loose. Now, lay a long steel ruler or a framing square over the width of the top. You may find the top is cupped. This problem should be solved before the glue goes on.

If you're sure the edges are square, then the problem is usually with the pipe clamps. Loosen and tighten them trying to get the boards level. If this doesn't work I usually fasten *Jorgenson* hand screws across the ends of the boards. This will get rid of the warp, as well as pull the boards flush (in line across the top).

When the boards are finally flush and the top is free of warp, I loosen all the clamps and I'm ready to glue. For almost all gluing I use *Franklin* Titebond or *Elmer's* Carpenter's Glue (both of these are "yellow" glues). I spread the glue on one edge of each board with a small (½") paint brush. The glue should go on in an even coat. It should look kind of glossy all along the edge. If the glue appears dull in a spot or two, it means it has soaked in. Apply a little bit more.

As I'm putting the pipe clamps back on, I place strips of waxed paper over the joints to make sure the pipe doesn't touch any of the glue. If the pipe does touch some glue, there will be a chemical reaction forming a black splotch on the wood.

FIGURE 3

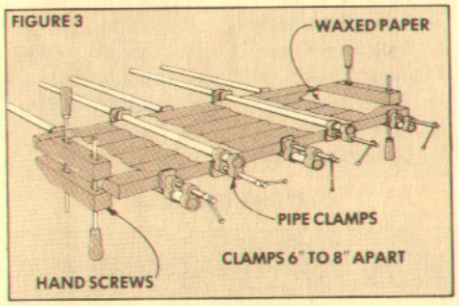

As the clamps are tightened, an even line of glue should seep up between the boards. (This may be a line of beads of glue.) That's good. You know there's enough glue in the joint so it's not starved, but not so much that it's slopping all over the place.

Should you wipe off this excess glue with a damp cloth?

The instructions on the glue bottles recommend that you do. I don't. I think that wiping at this point dilutes the glue and forces it into the wood — making it very difficult to sand out later.

I leave the boards clamped up just the way they are for at least an hour, but usually overnight. Then I use a paint scraper (the kind used for scraping paint off the side of a house) to scrape away the dried glue. Then you're ready to smooth the boards, making them a table top.

SMOOTHING THE TOP

So there they sit. A bunch of boards glued together, challenging you to transform them into a table top. Roll up your sleeves and choose your weapons.

The tools you choose can be powered by electricity or muscle. The power source doesn't really make much difference. Both require a gentle touch.

When faced with the task of smoothing out a table top, most peole (I think) would choose electric tools. It looks like a lot of work (it is), and those little electric motors whizzing away will someway make things much less difficult. But, the difficulty here is not the amount of physical labor involved. Rather, it's a matter of control. The purpose of both electric and hand tools is to remove wood. How much wood they remove, and whether they remove it in the proper places, is up to you.

SMOOTHING WITH ELECTRIC TOOLS

If you choose electric tools you need two pieces of equipment: a belt sander and a finish sander. The choice of a belt sander is pretty wide open. (We use a *Sears* model.) But the finish sander is a more difficult choice. I would recommend a *Rockwell Sped Bloc* Orbital Sander. It's expensive (about $75) and built for commercial use. But it's well worth the price — especially on a project like a table top.

If the table top is very rough you may want to rough plane it before starting with the belt sander. I've found that one of the best tools for smoothing larger surfaces is a *Wagner Safe-T-Planer*.

The *Safe-T-Planer* was discussed in *Woodsmith* Number Ten, Tools of the Trade. When this planer is mounted on a radial arm saw, it will do an excellent job of taking off the high spots on a large flat surface like a table top.

The belt sander is used next. Though the purpose of a belt sander is to take off wood, its not the motor that does the work. It's the grit on the belt. Your hand is not used to press down on the sander (that just makes the motor overheat). It's just there to guide the belt in the right direction.

What grit do you start with?

I would recommend an 80-grit belt. Coarser grits would remove more wood, but they would create large scratches in the wood. An 80-grit belt takes more time (and you'll have to change the belts more often) but you're less likely to run into serious trouble.

At first, hold the sander at a slight angle to the grain of the wood, about 30°. If you hold the sander at 90° to the grain (across the width), it will take off more wood, faster, but you may wind up with large ripples or waves on the surface. Holding it at about 30° takes off enough wood with less chance of causing ripples.

Hold the sander lightly, and keep it moving. The biggest danger is pushing the sander so it tips up on one edge and gouges out a deep scratch.

After the top is leveled, turn the sander to move *with* the grain, again with an 80-grit belt. Move it up and back, from one edge to the other (as if you were ironing). Stop every so often and check the surface with a long ruler or framing square. If there are any high spots I mark them with an "X" and slow the movement of the sander over these areas to take off more wood.

When you've got the table top flat, change to a 100-grit or a 120-grit belt to sand out the marks left by the coarser grit. Finally, use the *Rockwell Sped Bloc* to sand out all scratches left by the belt sander. I use 100-grit Garnet paper for the operation. If the *Sped Bloc* has left any swirl marks (it probably will) use a hand sanding black with 120-grit Garnet paper to get them out.

SMOOTHING WITH HAND TOOLS

It may seem like a contradiction, but I think working with hand tools is much easier than working with power tools. As mentioned earlier, it's not muscle power that makes things difficult. It's control. I feel I have better control with hand tools.

A table top can be smoothed to near perfection with one plane: a jack plane. The one I use is a 14" corragated bottom *Record* jack plane. It costs about $65. When the plane iron is sharp and it's set just right, there's no better feeling in the world (of woodworking).

You can plane a table top in less time than it takes with a belt sander. And, you won't have clouds of sawdust all over the shop (and house).

After planing the top with the jack plane, I sometimes go over it with a smooth plane (9" or 10" long), but I usually find this unnecessary if the jack plane (and the jack plane operator) is working properly.

The final step is smoothing the surface with a hand scraper blade (see *Woodsmith* No. 14). This little piece of steel will work wonders on the table top, leaving the grain clean and clear . . . ready for the finish.

A Chair Built Of Oak

A CONTEMPORARY CHAIR WITH FLASHY JOINTS

There's no way that building a chair can be considered easy. Sturdy construction and proper joinery are certainly required. Beyond that, a chair must be designed to comfortably accept the human anatomy.

The chair shown here was designed as a companion to the table shown earlier in this issue. We tried to design a chair that was sturdy and sturdy looking, comfortable for dining, and most important, a chair that was made of *wood*.

Before getting into the actual construction of this chair, I think it's appropriate to mention that the dimensions of this chair can (and probably should be) altered.

For dining chairs two criteria are important. The first consideration is the height of the seat from the floor. This distance is usually somewhere around 16" to 17", but can be altered for a 'tailored' fit. In fact, this measurement can be taken directly from the person who's going to be doing the sitting. To do this, bend your knee slightly and feel the crease on the back of the knee. Measure from the floor to this crease. This then is the height of the chair's seat from the floor (not including any foam or padding on the seat).

The second consideration is the relationship between the seat and the chair back. The seat of the chair usually slopes down toward the back of the chair anywhere in the range of 0° to about 5°. The back is also angled, usually somewhere between 5° and 20°.

Since both the seat and the back are angled, the relationship between these two (the net angle) determines the comfort of the chair. This angle (for a dining chair) should be between 95° and 100°. The smaller angle (95°) will feel comfortable if you sit up straight. The larger angle (100°) will feel comfortable if you tend to slouch a little. It's really sort of a personal decision.

PRELIMINARY WORK

All of what's been said above is just so much theory. When it gets down to actually building a chair, things can change. In fact, during the process of building this chair we goofed.

The chair that's shown here has the seat angled down at 4° and the back rest angled at 6°. This yields a net angle of 92° between the seat and back. This means you have to sit well back in the chair, and sit up straight. I find this a little uncomfortable.

However, we decided to perform a 'test sit' to get some other opinions. The results: Two people like it (Connie and Linda). One liked it with reservations (Ted, because he

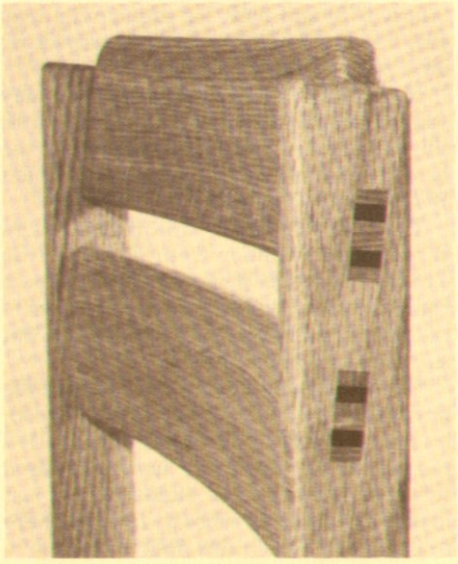

MATERIALS LIST

A	Front Legs (2)	1 1/16 x 2 1/8 - ~~18~~ 20
B	Back Legs (2)	1 1/16 x 2 1/8 - 32 1/4 36
C	Side Rails (2)	1 1/16 x 1 1/2 - 19
D	Front/Back Rails (2)	3/4 x 2 1/8 - 19
E	Side Stretchers (2)	1 1/16 x 1 5/16 - 14 3/4
F	Cross Stretcher (1)	3/4 x 2 1/8 - 20
G	Chair Back (8)	1 1/16 x 1 3/4 - 20
H	Plywood Seat	1/2 x 15 7/8 - 18
I	Upholstry Fabric	22 x 25

CUTTING DIAGRAM

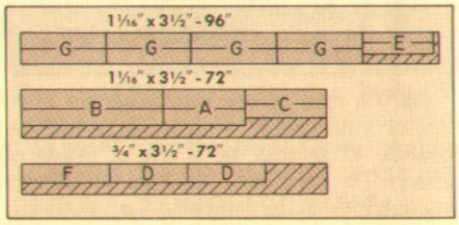

built it and didn't want to start all over again), and I thought the seat should be changed to a 0° angle (thus making the net angle 96°).

I reviewed the results, and in fair and impartial decision declared me the winner. So, all of the drawings and measurements for assembling the seat are based on a 0° angle, (which also makes construction a good deal easier).

STARTING CONSTRUCTION

The first step is to rip all the pieces to width and approximate length. Then the fun begins. There are 18 mortise and tenon joints in this chair, including three different variations on this joint.

The detail photo shows the beauty of this joint. But good looks aren't everything. A wedged mortise tenon joint is one of the strongest joints in woodworking.

Construction begins by cutting the front and back legs to length.

THE LEGS. The front legs are 18" long on the chair shown. However, if you want to alter the seat height (which is 16 9/16") you must adjust the length of the front leg. If you change the front legs, the back legs must be changed by the same amount. Also, when cutting the back legs to length, miter the tops at 6°, as shown in Fig. 3.

MORTISES IN LEGS. First cut a notch in both the front and back legs to accept the side rail, see Fig. 1. Then, inside this notch, through mortises are laid out, drilled and chopped square. Finally, stopped mortises cut near the bottom of the leg for the stretchers, Fig. 2.

NOTE: Step-by-step instructions for chopping out these mortises are given on page 12.

ANGLED MORTISES, BACK LEG. Laying out the angled mortises for the back rest (Fig. 3) is easier than it looks. Since the top of the back leg has been mitered at 6°, it's simply a matter of placing a try square on the top of this leg and marking a line down the side of the leg. Then the through mortises are laid out and cut as shown.

SIDE RAIL. There are actually two joints that hold the side rail to the front and back legs. Refer to Fig. 4. First, a notch is cut in the side rail to match the notch on the front and back legs. This, in effect, creates a half-lap joint. However, before this notch is cut, it's best to rout the edges to their half-round shape (which we did on a router table with a ½" quarter-round bit.)

After the notch is cut, the front leg is placed in the notch and the through mortise (which has already been cut in the leg) is used as a guide to mark out the stopped mortise in the side rail, Fig. 4.

STRETCHER. The final step (at least at this point) is to cut the tenons at the end of the side stretchers to fit their respective mortises. Also, a through mortise must be cut for the cross stretcher.

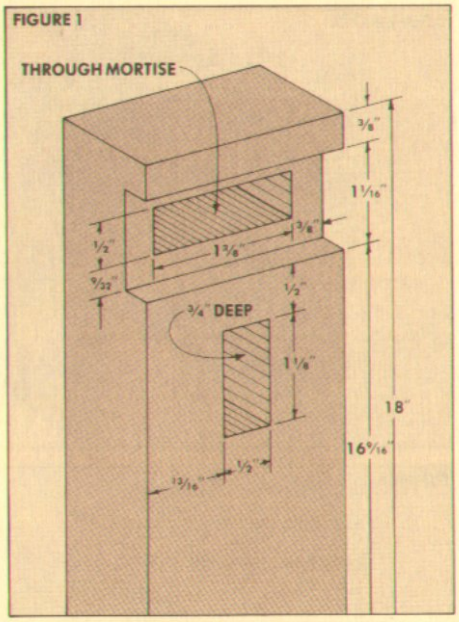

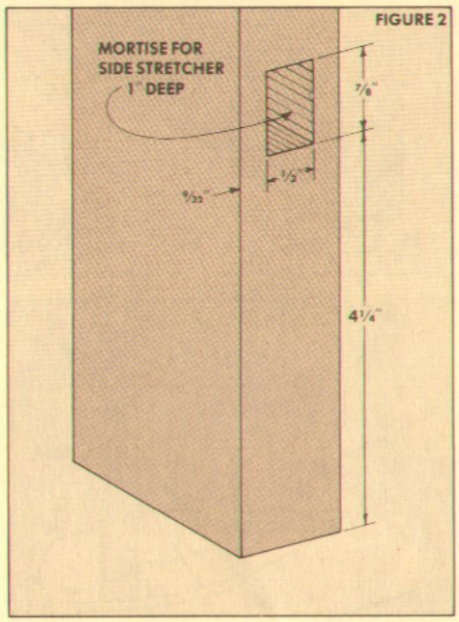

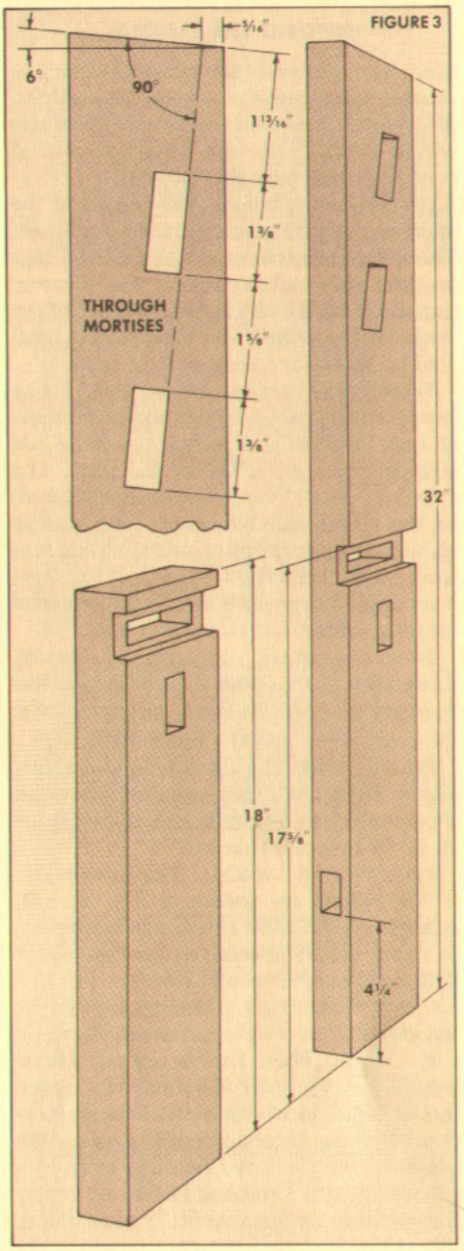

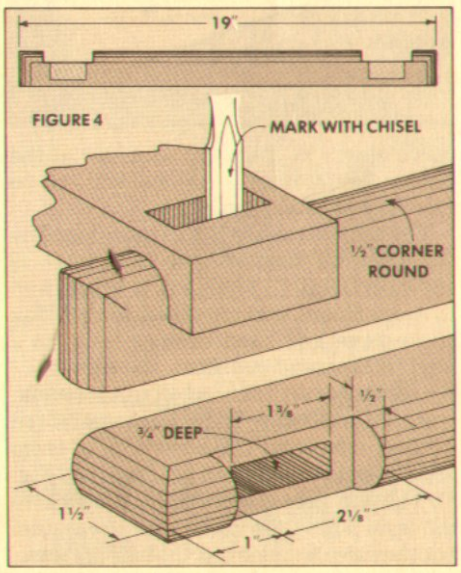

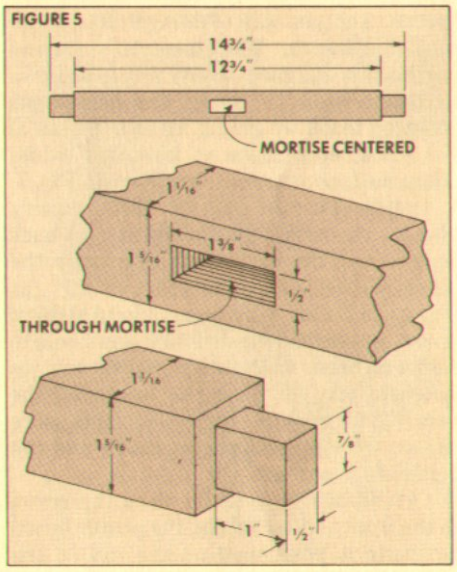

CUTTING THE TENONS

Since such a precise fit is required for the tenons, it may be helpful to cut them slightly larger than needed and pare them to size with a chisel. This is a little extra hand work, but will probably pay off.

As mentioned before, the tenons at the ends of the side stretchers are cut first. These side stretchers along with the legs and the side rails complete the 'frames' that make up the left and right sides of the chair. These frames should be dry assembled to make sure they match.

When everything checks out, these frames can be partially assembled. However, only the front and back legs and the side stretcher are glued up at this time. The side rail is placed in position (but not glued) so the frame can be squared up during clamping. After the glue is dry, *all* edges of this frame (including the ends of the legs) are rounded over with a ¼" quarter-round bit on a router.

Now it's simply a matter of hooking these two frames together with the five 'support' pieces: the front and back rails, the back rests, and the cross stretcher.

When cutting the tenons on these five pieces note that the distance between shoulders of the tenons is exactly the same on all five pieces, that is 17½".

FRONT AND BACK RAIL. The dimensions of the tenons are shown in Fig. 6, left. After the tenons are cut, the bottom edge of these pieces should be rounded over with a ¼" quarter-round bit.

CROSS STRETCHER. Dimensions for the tenons on the cross stretcher are shown in Fig. 6, right. These tenons are cut a little long — so they protrude about ⅛" beyond the lip of the mortises in the side stretchers. After the tenons are cut to size, both edges of this piece are rounded over.

BACK RESTS. The back rests are gently curved for a comfortable fit. In most chairs this curve is done by steam bending the pieces. Another way of doing it is to bandsaw the curve. We chose this second method for this chair. However, in order to accommodate this curve, the back rests must be made by gluing up four pieces of 5/4 stock, each piece at least 1¾" wide. Then the tenons are cut, as shown in Fig. 7.

TEMPLATE FOR CURVE. To simplify things, the curve for the front and back aprons and the back rests is exactly the same. We made a template for this curve as shown in Detail A by using a long strip of wood. At one end we drilled a small hole to fit over a brad. At the other end we cut two notches, one 48" from the brad and the other 48¾" from the brad. Then arcs were drawn on a piece of poster board and the template is cut out.

LAYING OUT CURVE. To mark the curve in the front and back rails, the poster board template is positioned on the rail so the curve starts ⅝" from the shoulder of the tenons, Detail B. (The side rail will rest on this ⅝"-wide flat spot.)

The same template is then positioned on the glued up block for the back rests as shown in Detail C. The curve is bandsawed to rough shape, and smoothed down with a spokeshave and hand scraper blade to a final thickness of ¾". Also, the corners of the backrests are rounded off to a 1" radius.

WEDGED TENONS. There are a total of ten wedged tenons on this chair. Six of them are real but four of them are fake (see Fig. 8). The four fake ones hold the side rails to the legs. These are mostly for decoration but they also supplement the half-lap joint.

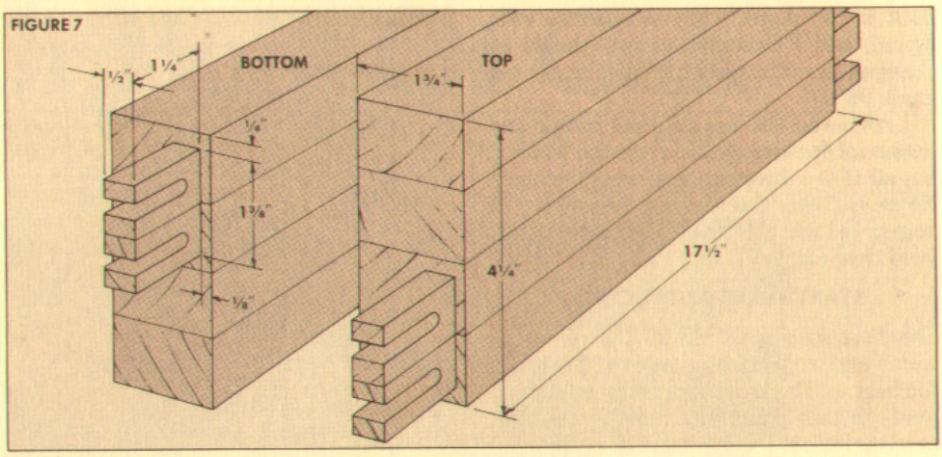

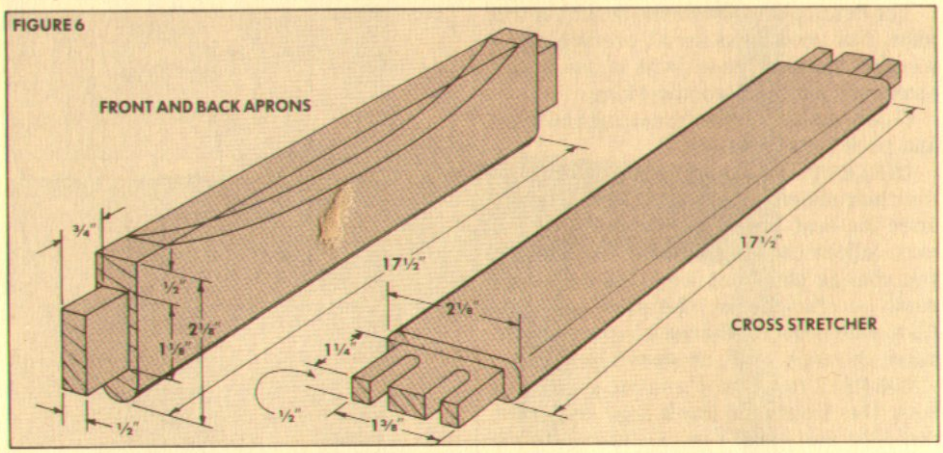

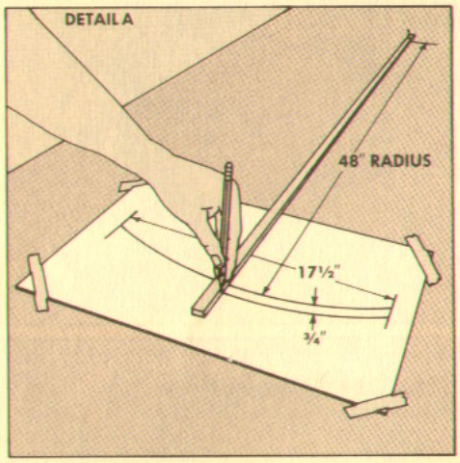

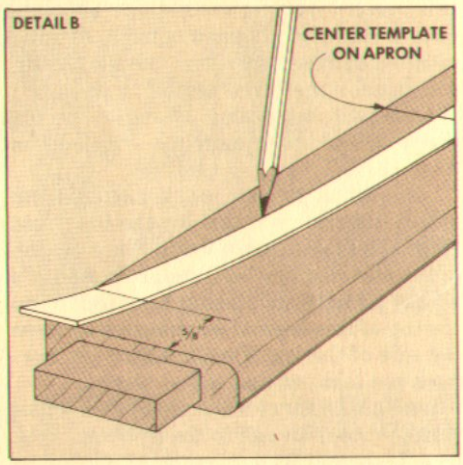

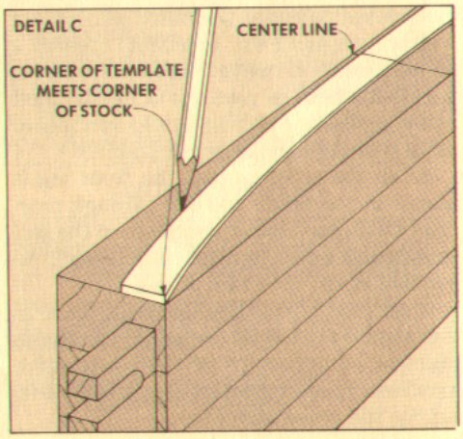

Figure 9 shows how the wedges force the outside sections of the tenon against the angled cheeks of the mortise. The trick is to cut slots in the tenon so the wedges force the outside sections out far enough to fill the mortise, but without splitting. To do this, first drill a 3/16" diameter hole about 3/8" from the shoulder of the tenon. Then use a back saw to saw down to the edges of the hole.

The wedges we used for this chair were cut from some scrap walnut (just for contrast in color). To make them, rip a piece of scrap 1/4" thick, 1/2" wide, and several inches long. Then sand one side of each end of this strip on a stationary belt sander to get a taper as shown in Fig. 8. Finally, cut a 1 1/2" length off the end of this strip. This is the wedge. One note of caution: once the wedges are in place, it is extremely difficult, if not impossible to get them out.

Now the chair can be assembled. The side rails are mounted to the partially assembled frames with the fake tenons, Detail D. Then the two frames are joined together with the back rests, front and back rails, and the cross stretcher. Glue everything up, drive in the wedges, and clamp it with pipe clamps.

When the glue is dry, use a belt sander to sand the protruding tenons flush with the face of the legs.

THE SEAT

The seat is a very simple process, that does not require any sewing. Basically, it's just a piece of 1/2" plywood with a bunch of shallow kerfs cut in it so it bends easily to match the curve on the front and back rails.

Before the fabric and padding are added to the plywood, L-brackets are mounted to hold the seat to the chair rails. First fasten L-brackets to the front and back rails, Fig. 11. Then put the plywood in position and mark the hole for the top part of the L-bracket. This end of the bracket is fastened to the seat with a machine screw and double nut assembly shown in Fig. 12.

Now a layer of 1" foam is placed on the plywood. On top of the foam are layers of cotton batting. As shown in Fig. 11 there are two extra layers of batting in the center of the seat. This is because when the seat is placed on the rails it will curve and the fabric will buckle slightly. The extra layers make the top of the seat look flat.

Finally, the fabric is added. (The fabric, foam padding and cotton batting should all be available at most fabric stores.) We used a chocolate brown velour to cover the seat. The fabric is cut to approximate size and wraped tightly around the plywood seat, and stapled in place with a staple gun.

To finish this chair, we applied three coats of *Watco* Danish oil. The oil was allowed to dry thoroughly (about two weeks) and then we put on a wash coat of 1 lb.-cut white shellac to add a little luster.

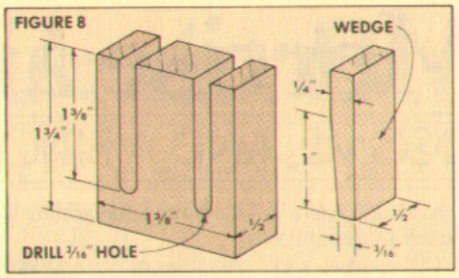

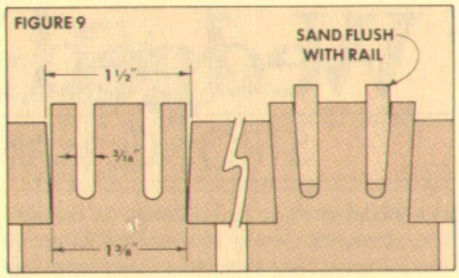

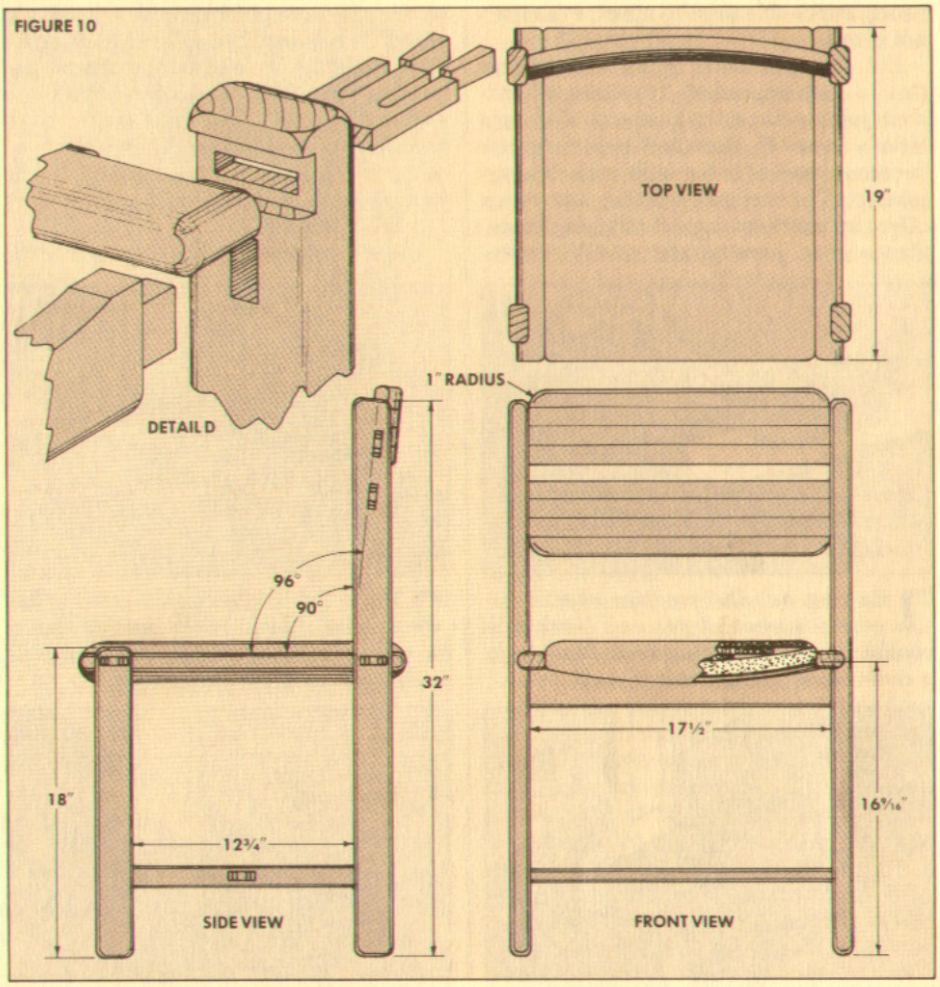

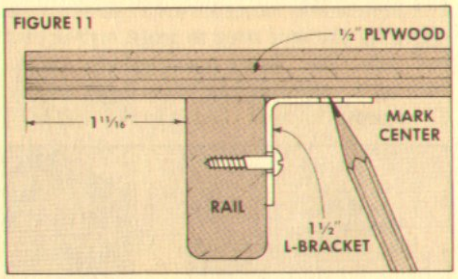

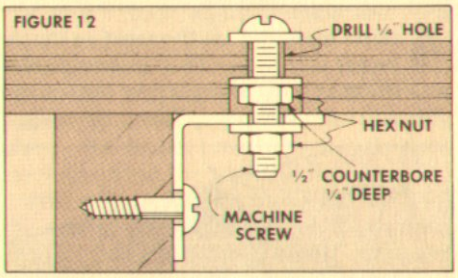

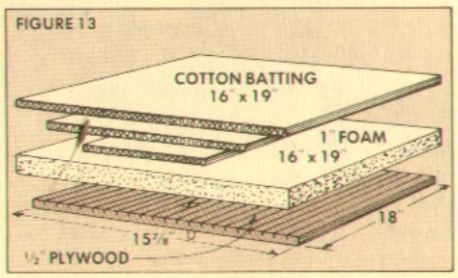

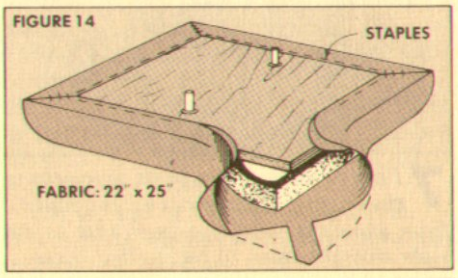

Wedged Mortise and Tenon

STRONG, HANDSOME, AND A BIT OF A SHOW-OFF

A wedged mortise and tenon joint is one of the strongest joints in woodworking. In fact, once this joint goes together, it's nearly impossible to get it apart, even if it's not glued.

But strength alone is not what makes this joint so appealing. It's quite a handsome joint — almost to the point of being a bit of a show-off. More and more furniture in recent years is being built with exposed joinery. The wedged mortise and tenon offers an excellent opportunity to demonstrate good joinery and careful craftsmanship, while at the same time adding a dash of decoration.

Of course, all of this does carry a price. In this case, the price is time. A good deal of time is required because the mortise for this joint must have squared corners, and the two end cheeks must be cut at a slight angle. Also, the tenon must be cut to fit precisely in the mortise. Then slots must be cut to accept the wedges, and finally the wedges must be cut. That's a lot of work . . . but I think it's worth it.

The steps for laying out and cutting the mortise are shown in Figures 1 through 6 below. Though I'm sure there are purists who would insist that the mortise be chopped out with mortising chisels, let's face it, mortising chisels are expensive and the whole process of chopping mortises by hand is very time consuming.

I much prefer to drill out most of the waste in the mortise first. Then it's just a matter of squaring the corners and cleaning up the cheeks. To do this, we use regular old butt chisels — they're cheap, and they get the job done.

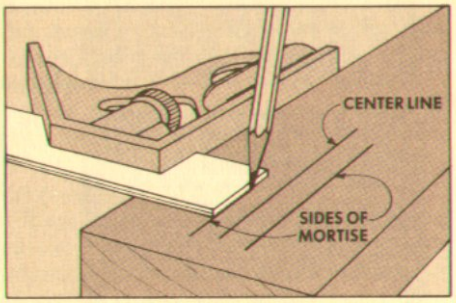

1 *Laying out the mortise cheeks depends on what bit you use. Mark both cheeks if a Forstner bit is used. Mark only a center line if a spur bit is used.*

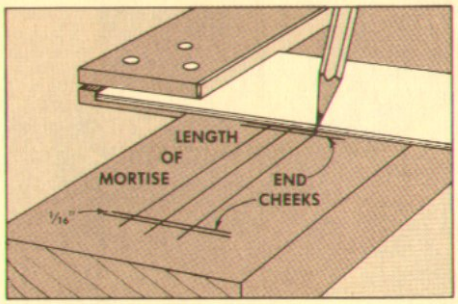

2 *Mark the length (end cheeks) of the mortise. Then, on the outside face of the rail only, mark another set of lines 1/16" to the outside of the end cheeks.*

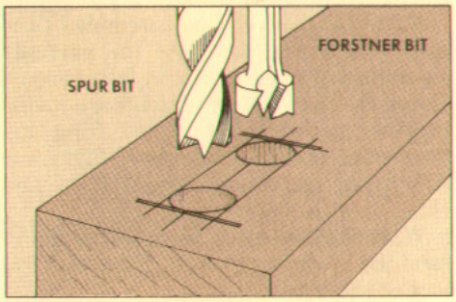

3 *A Forstner bit is the best bit to use to drill out the mortise. Use the outside cheek lines to align the bit. If a spur bit is used, align on center line.*

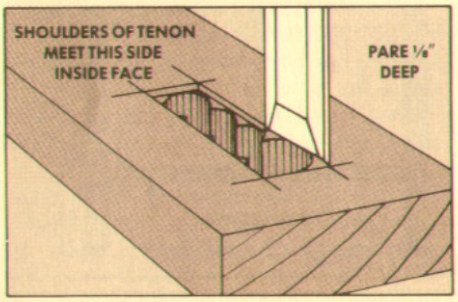

4 *Start squaring up the mortise on the inside face first. (This is the side that will be against the shoulders of the tenon.) Pare down to a depth of about 1/8" only.*

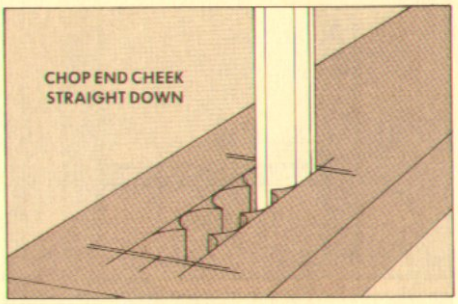

5 *Flip the rail over to work on the outside face. Start by squaring up the ends of the mortise, chopping to full depth. Then pare the side cheeks to full depth.*

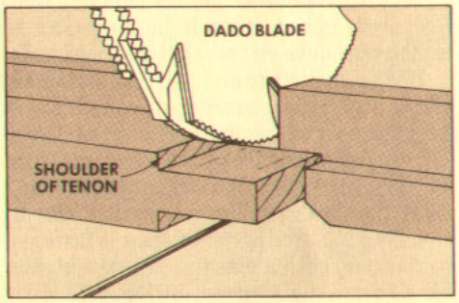

6 *Cut the tenon to approximate size, leaving it a bit oversize. Before cutting tenon on other end, make sure shoulder to shoulder distance is correct.*

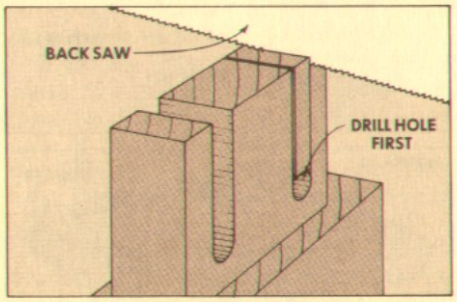

7 *Pare faces of tenon to fit precisely in the mortise. Then drill holes about 3/8" from shoulder, and use back saw to cut slots straight down to the drilled holes.*

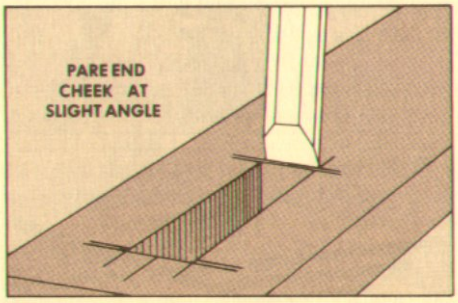

8 *Finish up on mortise by cutting the end cheeks at a slight angle. Start cut about 1/16" from end cheek. Chisel will almost automatically make angled cut.*

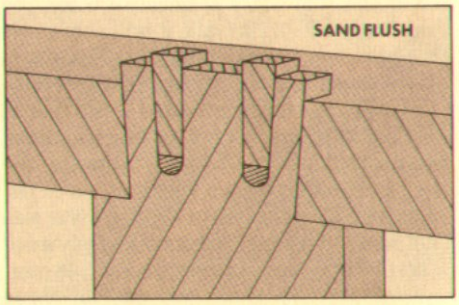

9 *Cut a long strip of wood to fit wedge slots. Taper ends on belt sander, and cut off lengths for wedges. After joint is glued up, sand off end flush with rail.*

End-Grain Box Top

END GRAIN: IF YOU CAN'T FIGHT IT, JOIN IT

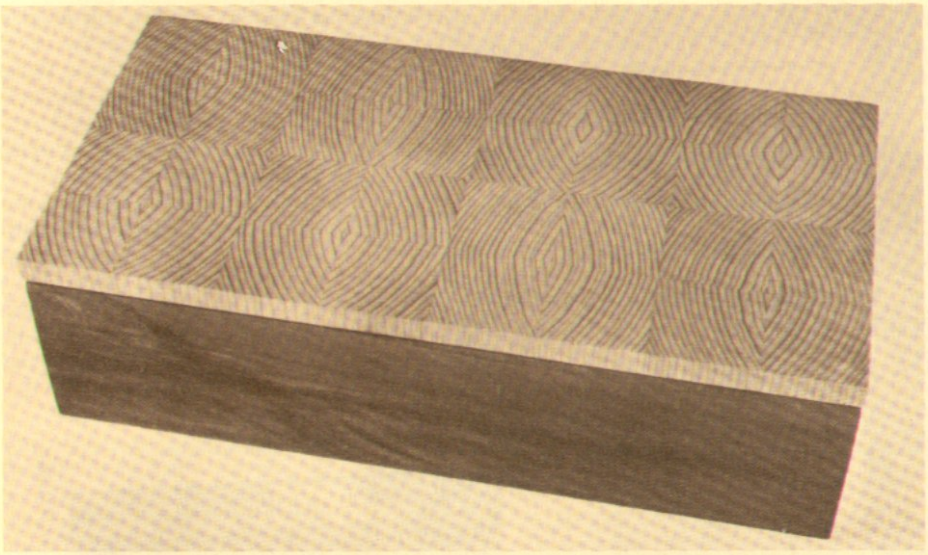

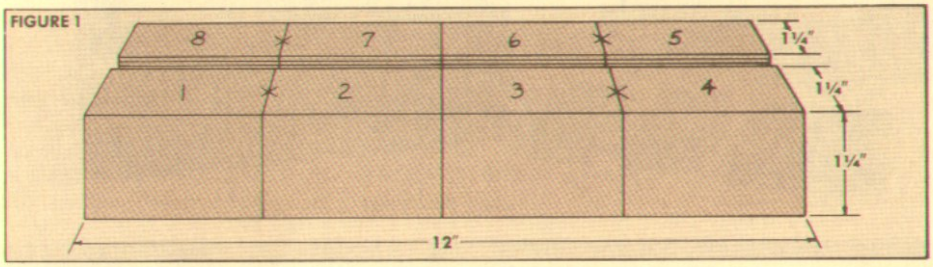

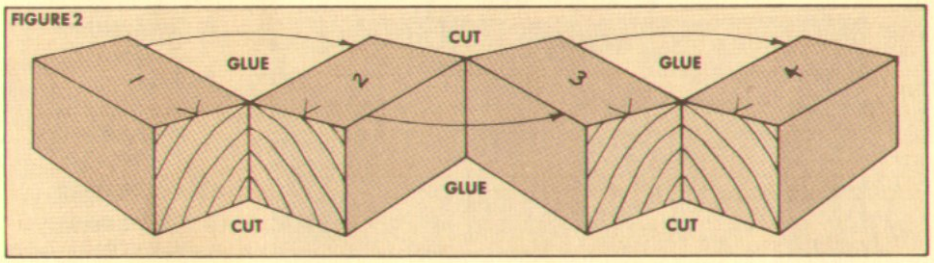

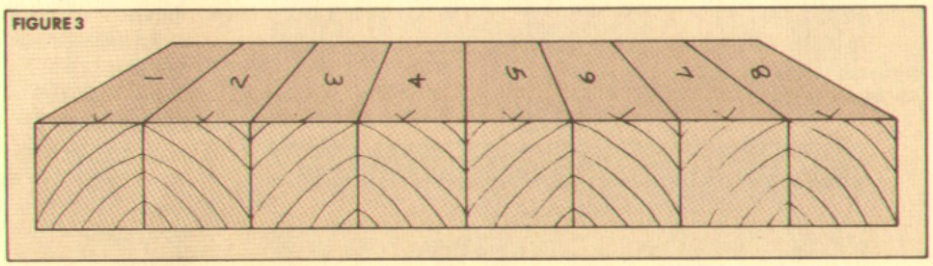

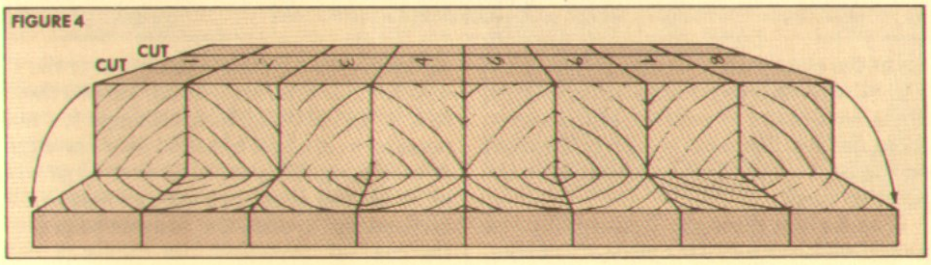

We all spend a lot of time fighting end grain. Whether in joinery or finishing, end grain presents obstacles that must be confronted. I finally gave up . . . and decided if I can't fight it, I'll join it. The result is this end-grain box top.

It may be of some consolation to know that this is one project where good old white pine yields better results than almost any hardwood. The box top shown here was made from a piece of plain-cut white pine 2x4. To get the best ring pattern, select a 2x4 cut from, or near, the center of the tree. (Fortunately, this is very common.)

The box top consists of 32 blocks, each 1¼" square. In order to get these blocks cut and arranged in the bull's eye pattern, I followed this cutting sequence.

STEP 1. I started with a piece of 2x4 about 18" long (for easier handling) with a 12" clear section at one end. Since 2x4s come with rounded edges, it must be squared up first. I wound up with a piece 2¾" wide and about 1⅜" thick.

It's important to choose a blade that will give a nice smooth cut because it's not wise to do any sanding after cutting. I chose a *Sears* hollow-ground planer blade.

STEP 2. Set the rip fence exactly 1¼" from the inside of the blade, and rip off two pieces 1¼" wide as shown in Fig. 1. Then turn each piece on edge and make a second cut so it's 1¼" thick. Now mark off 3⅛" lengths on each piece and number each section to keep them in order.

STEP 3. Cut four 3"-long sections from each piece (yielding eight sections in all). These sections are 'opened' as shown in Fig. 2 to produce 'book matched' pairs.

STEP 4. These eight sections are then glued up, paying close attention to the end grain pattern. Looking at the end of this block, the ring patterns should form a series of four half-circles, Fig. 3. If, during gluing, the blocks have slipped, you must carefully plane the surfaces flat.

STEP 5. Now, four strips can be ripped off the end of this block, Fig. 4. Each strip should be about ⅝" 'long.' These strips are then matched to form the bull's eye pattern and glued up in two rows.

Since I wanted to preserve the bull's eye pattern all the way out to the edges, I built the lid first and then built the box to fit so no trimming would be necessary. The box shown here is made of red gum and joined with locked rabbet joints.

The lid and box were finished with 1½ lb.-cut white shellac, and then given a coat of carnauba furniture wax.

Shop Storage Box

A PLACE FOR EVERYTHING

I can't say that building this storage box is easy. Cutting all those little pieces is not too bad. But assembling those little pieces into a lot of little drawers tends to get a bit tedious.

We've had a lot of requests for a made-of-wood storage box like this. The metal and plastic storage units you see everywhere are nice, but they're still plastic. And it seems most woodworkers disdain things made of plastic.

We tried to design this box to make efficient use of materials, and at the same time come up with a modular design so the box could be built to suit a variety of needs.

While we're on the subject of design, permit me a few comments. 1) As you can see from the Cutting Diagram this storage box makes very efficient use of readily available materials. This is nice the first time around, as well as in the future as more boxes are built.

2) There are two sizes of drawers. The small one is quite adequate for brads, small screws, etc. The larger drawers will hold, for example, 100 1½" screws, or two dozen bolts or lag screws, etc.

3) Since the large drawers are exactly double the width of the smaller ones, this box can be built with all small drawers, all large ones or any combination with only minor changes in the Cutting Diagram and no need for extra materials.

4) The drawers are designed so the bottom also serves as a handle as well as providing space for a label to identify the contents of the drawer.

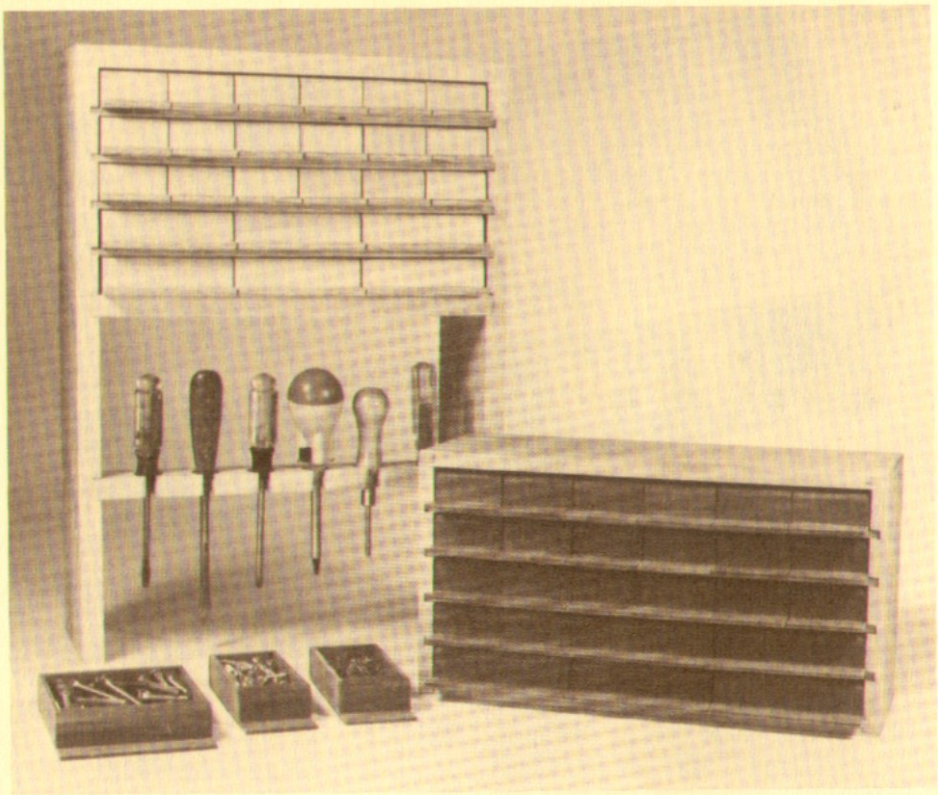

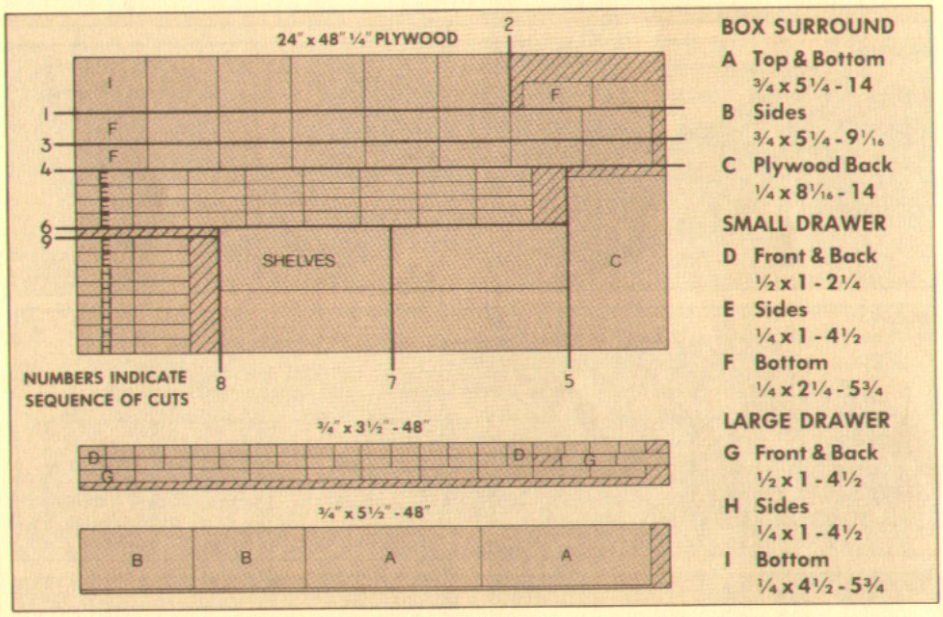

BUILDING THE BOX

All dimensions shown in the Materials List are based on using ¼" plywood for the drawer bottoms and sides, and the shelves. The Cutting Diagram shows the layout for building the basic unit with 18 small drawers and 6 double-wide drawers. It doesn't include the option of adding the longer sides for the tool bar as shown in the photo.

Note: The box shown in the foreground of the photo is a fancier version made of ½" maple for the box, ⅛" birch plywood for the shelves, ⅛" Masonite for the drawer bottoms and sides, and red gum for the drawer fronts and backs. Though this unit is a little nicer, it obviously doesn't make good use of readily available materials. (I just wanted to build a fancy one.)

Construction of this storage unit is really quite simple. I started by building the basic 'surround.' A simple rabbet joint is used to join the four corners.

First, ¼" deep by ¾" wide rabbets are cut at the ends of the two side pieces. Then four ¼" x ¼" dadoes are cut for the shelves. Make sure there is exactly 1 5/16" between these dadoes. Then cut a ¼" by ¼" rabbet on the back edge of all four pieces for the plywood back.

Now for the drawers. I started by ripping 1"-wide strips from a piece of 1x4 pine, 48" long. After these strips are cut to the 1" width, I reset the fence to rip (resaw) them to a ½" thickness. Then, although it's not necessary, it's best to round over one edge of each strip. This rounded over edge will be at the top of the drawer and makes it a little easier to slide the drawer back into the box.

Table Saw Techniques

CUTTING AND RABBETING SMALL PIECES

Special precautions should be taken when working with very small pieces on a table saw. Here are two set-ups we use to keep fingers protected, yet still make accurate cuts.

Whenever we have to cut a whole bunch of small pieces to the same length, we use the set-up shown in Fig. 1. There is a rule when using a table saw that you should never use the miter gauge and rip fence at the same time.

If they were used together, the cut-off piece would be trapped between the blade and the rip fence. Very quickly the blade would catch the piece and throw it back at you — not good.

In order to solve this problem we clamp a piece of 2x4 scrap to the rip fence. The front edge of this block is placed in line with the front edge of the blade. Then the cut-off length is measured from the blade to the block. The workpiece is pushed against the block and guided through the blade.

With this set-up, the cut-off pieces have enough space between the blade and the rip fence so they won't get trapped and thrown back.

The rule mentioned above is intended for through (or cut-off) sawing. In the case of cutting a rabbet at the end of a piece, both the miter gauge and rip fence can be used in conjunction.

The set-up shown in Fig. 2 shows this operation. However, since we were cutting a rabbet on the end of very small pieces, we added an extension fence to the miter gauge to support the piece all the way to the blade.

Also, we clamped a strip of ¼" plywood to the rip fence to hold down the end of the workpiece. Since the plywood is positioned directly over the blade, it serves as a blade guard as well.

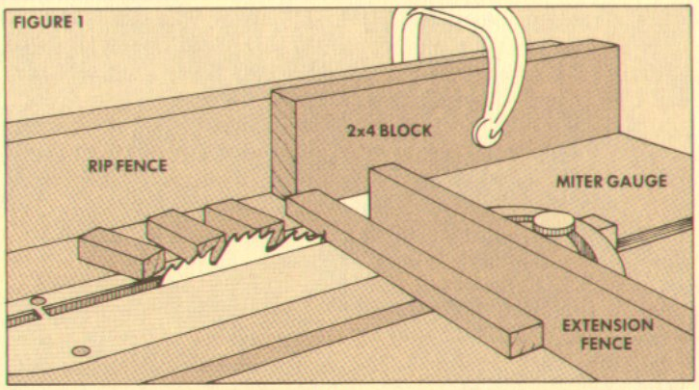

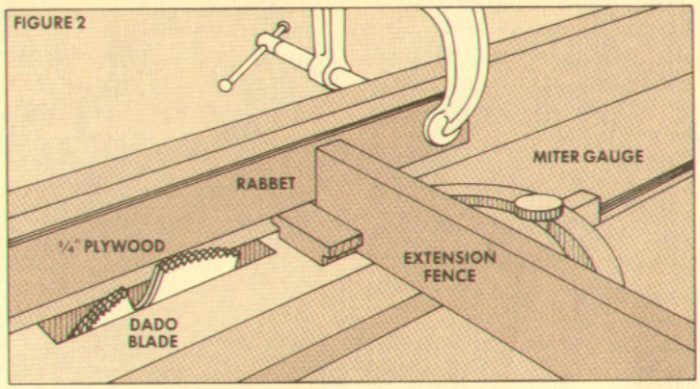

Before cutting any pieces to length, I went ahead and ripped the ¼" plywood for the drawer bottoms and sides, and cut the shelves and back to size. The Cutting Diagram doesn't allow much waste. The layout allows ⅛" for kerfs, but there's almost no room for error.

Once all of the strips have been cut, you must cut off all the pieces to length. (Some special set-ups for cutting small pieces are described in the article above.)

To assemble the drawers I found it much easier to use the nailing fixture described on page 3. Though it takes time to make this fixture, it sure makes nailing these little drawers a whole lot easier.

After nailing the drawers together, I sanded down the sides on a disk sander mounted on the table saw. This little bit of sanding not only smoothes out the sides of the drawer, but also creates the minimum clearance necessary between the drawers. (The dimensions of the drawers and the surround allow no clearance, hence the sanding takes care of this.)

One final suggestion. I use 'peel and stick' address labels to mark the contents of the drawer. These labels should be available at almost any stationery store.

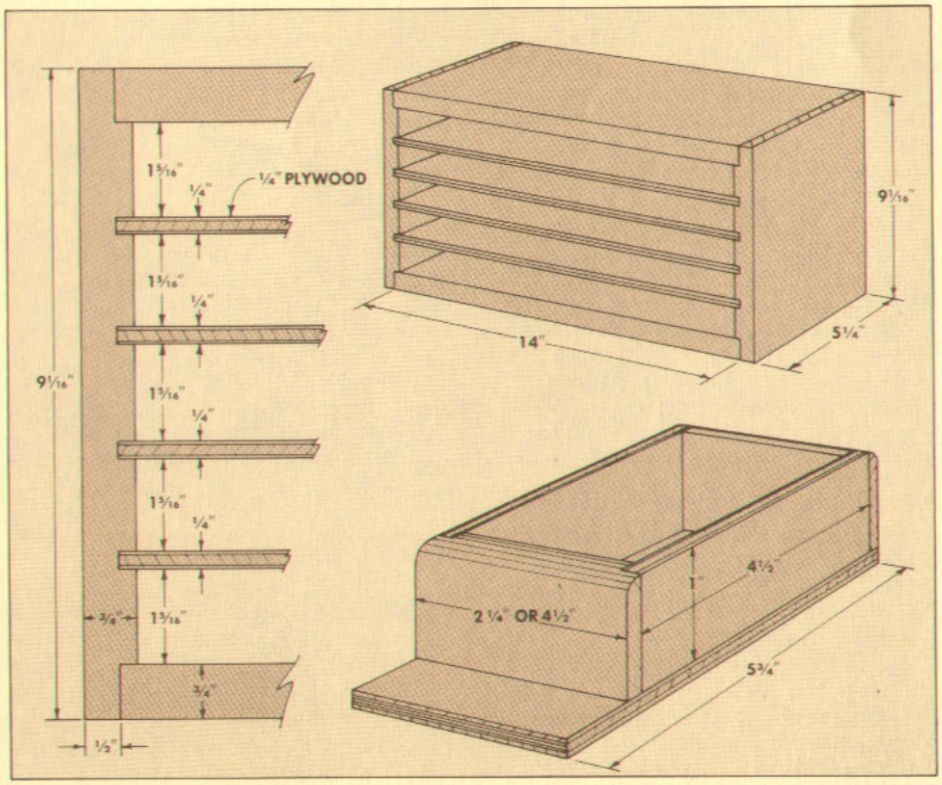

Radial Saw Techniques

CUTTING AND RABBETING SMALL PIECES

Cutting small pieces on a radial arm saw requires a slightly different approach than was used on the table saw (previous page).

Although a stop block (or end block) can be used on a table saw for setting the length for cutting off small pieces, this is not a good practice on a radial arm saw. As shown in Fig. 1, we use only a pencil line on the fence to gauge the length of the cut-off.

If a stop block were clamped to the fence, the small piece could easily be caught by the blade, especially when the blade carriage is moved back after the cut.

However, even if the block is not present, the cut-off piece could still be caught and thrown across the room. One extra precaution we take is to use a hollow-ground planer blade for these small cut-offs. The teeth of this blade are not 'set' so they don't project out from the blade and there's less chance of the blade catching the cut-off piece.

When cutting rabbets on the end of small pieces, it's necessary to provide a method of holding the workpiece in place while the cut is made.

We use the holding fixture shown in Fig. 2. A small notch is cut out of one corner of a piece of scrap that matches the size of the workpiece. The workpiece is placed in the fixture and pushed against a stop block. This procedure keeps your fingers well away from the blade, yet allows complete control during the cut.

FIGURE 1

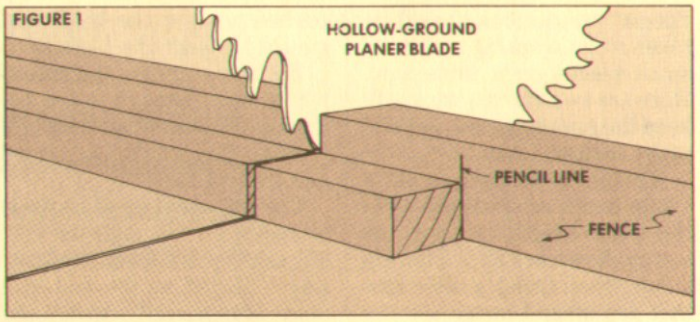

FIGURE 2

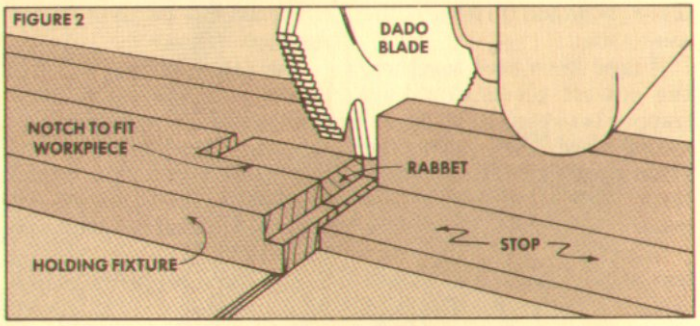

BACK ISSUES

Following is a list of the contents of back issues of *Woodsmith*. Back issues are available for $2 each.

Number One: Trestle Table, Contemporary Double-Duty Tables, Tie Rack, Cookie Cooling Rack, Cutting Board, Finger Clamps, Drill Press Guides, Taper Jig, Carpenter's Triangle.

Number Two: Contemporary Chairs, Table Saw Techniques: Box Joint and Stopped Dado, Hanging Lamp, Raised-Panel Door, Technique: Mitered Half-Lap, Shaker Peg Rack.

Number Three: Canvas and Redwood Deck Chair, Redwood Garden Bench, Deck Squares, Redwood Plant Tub, Cedar Plant Pillars, Hanging Planter, Tips For Outdoor Furniture, Nine Variations On Planter Boxes.

Number Four: Roll-Top Bread Box, Three Angle Drilling Jigs, Shop Stool, Lazy Sam Tool Storage, Box Of Drawers, Box Building Basics, A Case For Storing Router And Bits.

Number Five: Exclusive Plans For A Router Table, Make Your Own Tools: Wedge Clamps, Taper Jig, Bow Saw, Drawing An Ellipse, Oval Frame, Toy Train and Race Car.

Number Six: Music Box, Cookbook/Recipe Shelf, Candle Sconce, Spice Box, Joinery Techniques: Rabbet and Groove Joint, Three Resawing Jigs, Wooden Christmas Ornaments, Christmas Display Tree.

Number Seven: Book/Magazine Case, File Cabinet, Miter and Spline Joinery, Router Table Techniques, Book Rack, Looseleaf Binder, Waste Basket, Tips & Techniques.

Number Eight: Joinery: Mortise & Tenon, Frame and Panel Construction, Wall-Hung Cabinet, Frame and Panel Contemporary Cabinet, Panel Cutting Techniques.

Number Nine: Projects With Wooden Hinges: Adjustable Light Bracket, Jewelry Box, Lap Desk, Sweater Chest, Display Case; Joinery: Locked Miter, Joinery: End Boards, Joinery: Parallel Spline, Tips & Techniques.

Number Ten: Projects From Scrap Wood: Desk Clock, Vanity Mirror, Coin Tray, Belt Buckle, Knife Holders, Letter Opener, Recipe Box; Joinery Techniques: Rabbet/Dado Joint, Gluing-Up Laminations; Tools of the Trade.

Number Eleven: Shaker Design: Side Table, Candle Stand, Drop-Leaf Table; Technique: Drop Leaf Joint, Mounting Hinges; Mathematics of Tapering a Leg; Circle Sanding Jig.

Number Twelve: Slant-Top Writing Desk, Octagonal Clock Frame, Round Mirror, Cutting Twin Tenons By Hand, Horizontal Boring Jig, Mathematics of Miters, Adjustable Miter Jig, Cove Cutting On A Table Saw.

Number Thirteen: Contemporary Hutch/Cabinet, Step By Step To Building Glazed Doors, Mortise and Tenon With Concealed Rabbet, Roll-Around Shop Cart, Routed Jewelry Box, Glass Cutting Techniques.

Number Fourteen: Pembroke Table, Butler's Tray Table, Drawing An Elipse, Mounting Drop-Leaf Hinges, How To Sharpen A Scraper Blade, Turned Canister, Finishing Techniques, How To Mount Butler's Table Hinges.

Woodsmith
1912 Grand Ave. Des Moines, IA 50309

ISSN: 0614-4114

Second Class Postage Paid
At Des Moines, IA

Postmaster:
Address Correction Requested